FAVORIT 86011 VI

User manual

Dishwasher

Dear Customer

Thank you for choosing one of our high-quality products.

With this appliance you will experience the perfect combination of functional design and cutting edge technology.

Convince yourself that our appliances are engineered to deliver the best performance and control - indeed we are setting the highest standards of excellence.

In addition to this you find environmental and energy saving aspects as an integral part of our products.

To ensure optimal and regular performance of your appliance please read this instruction manual carefully. It will enable you to navigate all processes perfectly and most efficiently. To refer to this manual any time you need to, we recommend you to keep it in a safe place. And please pass it to any future owner of the appliance.

We wish you much joy with your new appliance.

The following symbols are used in this user manual:

Important information concerning your personal safety and information on how to avoid damaging the appliance.

General information and tips

Environmental information

Contents

Operating instructions 5

Safety information 5
- Correct use 5
- General safety 6
- Child safety 6
- Installation 6

Product description 7

Control panel 8
- Setting mode 9
- Audible signals 10

First use 10

Set the water softener 11
- Setting manually 12
- Setting electronically 12

Use of dishwasher salt 13

Use of rinse aid 14
- Adjusting the dosage of rinse aid 15

Daily use 15

Load cutlery and dishes 15
- The lower basket 17
- The cutlery basket 17
- The upper basket 19
- Adjusting the height of the upper basket 20

Use of detergent 21
- Fill with detergent 21

Multi-tab function 22
- Activation/deactivation of the Multitab function 23

Washing programmes 24

Select and start a washing programme 25

117970150 - 022008

Unloading the dishwasher 27

Care and cleaning 27

Cleaning the filters 27
Cleaning the spray arms 29
External cleaning 29
Internal cleaning 29
Prolonged periods of non-operation 29
Frost precautions 29
Moving the machine 30

What to do if... 30

Technical data 32

Hints for test institutes 33

Installation instructions 35

Installation 35

Fixing to the adjacent units 35
Levelling 35

Water connection 36

Water supply connections 36
Water inlet hose with safety valve 36
Water outlet hose connection 37

Electrical connection 38

Environment concerns 39

Packaging material 39

Subject to change without notice

Operating instructions

Safety information

In the interest of your safety and to ensure the correct use, before installing and first using the appliance, read this user manual carefully, including its hints and warnings. To avoid unnecessary mistakes and accidents, it is important to ensure that all people using the appliance are thoroughly familiar with its operation and safety features. Save these instructions and make sure that they remain with the appliance if it is moved or sold, so that everyone using it through its life will be properly informed on appliance use and safety.

Correct use

- This dishwasher is only intended for washing household utensils suitable for machine washing.
- Do not put any solvents in the dishwasher. This could cause an explosion.
- Knives and other items with sharp points must be loaded in the cutlery basket with their points down or placed in a horizontal position in the upper basket.
- Only use products (detergent, salt and rinse aid) suitable for dishwashers.
- Avoid opening the door whilst the appliance is in operation, hot steam may escape.
- Do not take any dishes out of the dishwasher before the end of the dishwashing cycle.
- After use, isolate the appliance from the power supply and turn off the water supply.
- This product should be serviced only by an authorised service engineer, and only genuine spare parts should be used.
- Under no circumstances should you attempt to repair the machine yourself. Repairs carried out by inexperienced persons will cause injury or serious malfunctioning. Contact your local Service Force Centre. Always insist on genuine spare parts.

General safety

- Dishwasher detergents can cause chemical burns to eyes, mouth and throat. Could endanger life! Comply with the safety instructions of the dishwasher detergent manufacturer.
- The water in your dishwasher is not for drinking. Detergent residues may still be present in your machine.
- Ensure that the door of the dishwasher is always closed when it is not being loaded or unloaded. In this way you will avoid anybody tripping over the open door and hurting themselves.
- Do not sit or stand on the open door.

Child safety

- This appliance is designed to be operated by adults. Don't allow children to use the dishwasher unsupervised.
- Keep all packaging well away from children. There is risk of suffocation.
- Keep all detergents in a safe place out of children's reach.
- Keep children well away from the dishwasher when the door is open.

Installation

- Check your dishwasher for any transport damage. Never connect a damaged machine. If your dishwasher is damaged contact your supplier.
- All packaging must be removed before use.
- Any electrical and plumbing work required to install this appliance must be carried out by a qualified and competent person.
- For safety reasons it is dangerous to alter the specifications or attempt to modify this product in any way.
- Never use the dishwasher if the electrical supply cable and water hoses are damaged; or if the control panel, work top or plinth area are damaged such that the inside of the appliance is freely accessible. Contact your local Service Force centre, in order to avoid hazard.
- All sides of the dishwasher must never be drilled to prevent damage to hydraulic and electric components.

WARNING!

For electrical and water connection carefully follow the instructions given in specific paragraphs.

Product description

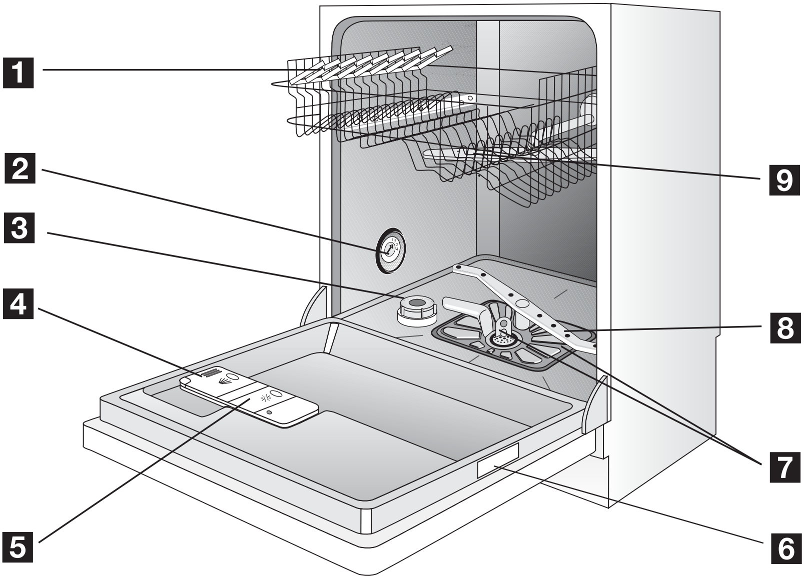

1 Upper basket
2 Water hardness dial
3 Salt container
4 Detergent dispenser
5 Rinse aid dispenser
6 Rating plate
7 Filters
8 Lower spray arm
9 Upper spray arm

Control panel

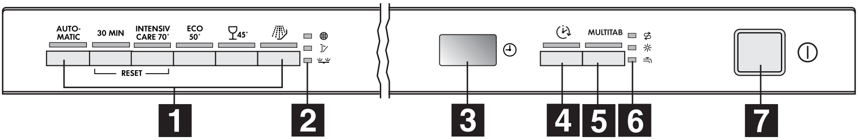

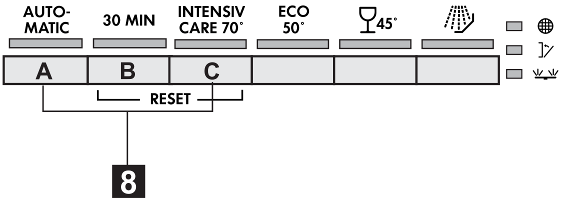

1 Programme selection buttons
2 Indicator lights
3 Digital display
4 Delay start button
5 **MULTITAB** button
6 Indicator lights
7 On/Off button
8 Function buttons

Indicator lights	
Filter	Illuminates from time to time, apart from the amount of soil on the filters. Check and if necessary clean the filters.
Door open	Illuminates when the door has not been properly closed.
Spray arm	Illuminates when the upper spray arm is blocked.
Salt	Illuminates when the special salt has run out. [1)]
Rinse aid	Illuminates when the rinse aid has run out. [1)]

Indicator lights	
Close tap	Illuminates when the dishwasher does not fill with water.

1) The salt and rinse aid indicator lights are never illuminated while a washing programme is running even if filling with salt and/or rinse aid is necessary.

The digital display indicates:
- the level of hardness to which the water softener is set,
- the approximate remaining time of the running programme,
- activation/deactivation of the rinse aid dispenser (**ONLY** with Multitab function active),
- the end of a washing programme (a zero will appear in the digital display),
- the countdown of the delay start,
- fault codes concerning malfunction of the dishwasher,
- activation/deactivation of the audible signals.

Function buttons

The following functions can be set with the help of these buttons:
- setting of the water softener,
- cancel a washing programme or a delay start in progress,
- activation/deactivation of the rinse aid dispenser when Multitab function is active,
- activation/deactivation of the audible signals.

Setting mode

The appliance is in setting mode when **all** programme lights are illuminated.

Always remember that when performing operations such as:
- selecting a washing programme
- setting the water softener
- activating/deactivating the rinse aid dispenser
- activating/deactivating the audible signals

the appliance **MUST** be in setting mode.

If a programme light is illuminated, the last performed programme is still set.

In this case, to return to setting mode, the programme has to be cancelled.

To cancel a set programme or a programme in progress: simultaneously press and hold the two programme buttons positioned over the word RESET, until all the programme button lights will illuminate. The programme has been cancelled and the machine is now in setting mode.

Audible signals

Audible signals have been introduced to help indicate which operations the appliance is performing:

- setting the water softener
- end of the programme
- intervention of an alarm due to malfunction.

Factory setting: audible signals activated.

It is possible to deactivate the audible signals, using the function buttons.

1. Press the **On/Off** button. The appliance must be in **setting mode**.
2. Simultaneously press and hold function buttons **B** and **C**, until the light of the function buttons **A**, **B** and **C** start flashing.
3. Press function button **C**, the lights of buttons **A** and **B** turn off while the light of function button **C** goes on flashing. The digital display indicates the current setting.

0b	= Audible signals deactivated
1b	= Audible signals activated

4. To change the setting, press again function button **C**: the digital display will indicate the new setting.
5. To memorize the operation, switch off the dishwasher.

First use

Before using your dishwasher for the first time:

- Ensure that the electrical and water connections comply with the installation instructions
- Remove all packaging from inside the appliance
- Set the water softener

- Pour 1 litre of water inside the salt container and then fill with dishwasher salt
- Fill the rinse aid dispenser

If you want to use combi detergent tablets such as: "3 in 1", "4 in 1", "5 in 1" etc... set the Multitab function (see "Multitab function").

Set the water softener

The dishwasher is equipped with a water softener designed to remove minerals and salts from the water supply, which would have a detrimental or adverse effect on the operation of the appliance.

The higher the content of these minerals and salts, the harder your water is. Water hardness is measured in equivalent scales, Clarke degrees, French degrees (°TH) and mmol/l (millimol per litre - international unit for the hardness of water).

The softener should be adjusted according to the hardness of the water in your area. Your local Water Authority can advise you on the hardness of the water in your area.

Water hardness			Adjusting the water hardness setting		Use of salt
Clarke	°TH	mmol/l	manually	electronically	
64 - 88	91 - 125	9,1 - 12,5	2	level 10	yes
53 - 63	76 - 90	7,6 - 8,9	2	level 9	yes
46 - 52	65 - 75	6,51 - 7,5	2	level 8	yes
36 - 45	51 - 64	5,1 - 6,4	2	level 7	yes
28 - 35	40 - 50	4,0 - 5,0	2	level 6	yes
23 - 27	33 - 39	3,3 - 3,9	2	level 5	yes
18 - 22	26 - 32	2,61 - 3,2	1	level 4	yes
13 - 17	19 - 25	1,9 - 2,5	1	level 3	yes
5 - 12	7 - 18	0,71 - 1,8	1	level 2	yes
< 5	< 7	< 0,7	1	level 1	no

The water softener must be set in both ways: manually, using the water hardness dial and electronically.

Setting manually

The dishwasher is factory set at position 2.

1. Open the dishwasher door.
2. Remove the lower basket from the dishwasher.
3. Turn the water hardness dial to position 1 or 2 (see table).
4. Replace the lower basket.

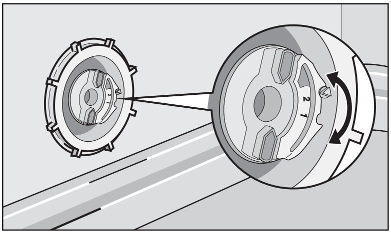

Setting electronically

The dishwasher is factory set at level 5.

1. Press the On/Off button. The dishwasher must be in setting mode.
2. Press simultaneously and keep pressed buttons **B** and **C**, until the lights of buttons **A**, **B** and **C** start flashing.
3. Press button **A**, the lights of buttons **B** and **C** turn off while the light of button **A** goes on flashing. In the digital display will show the current level and a sequence of intermittent audible signals are heard.

   Examples:

   5 L displayed, 5 intermittent audible signals, pause, etc... = level 5

   10 L displayed, 10 intermittent audible signals, pause, etc... = level 10
4. To change the level, press button **A**. Each time the button is pressed the level changes (for the selection of the new level see the chart).

   Examples: if the current level is 5, by pressing button **A** once, level 6 is selected. if the current level is 10, by pressing button **A** once, level 1 is selected.
5. To memorise the operation, switch off the dishwasher by pressing the On/Off button.

Use of dishwasher salt

WARNING!

Only use salt specifically designed for use in dishwashers. All other types of salt not specifically designed for use in a dishwasher, especially table salt, will damage the water softener. Only fill with salt just before starting one of the complete washing programmes. This will prevent any grains of salt or salty water, which may have been spilt, remaining on the bottom of the machine for any period of time, which may cause corrosion.

To fill:

1. Open the door, remove the lower basket and unscrew the cap of the salt container by turning it anticlockwise.
2. Pour 1 litre of water inside the container **(this is necessary only before filling with salt for the first time)** .
3. Using the funnel provided, pour in the salt until the container is full.
4. Replace the cap making sure that there is no trace of salt on the screw thread or on the gasket.
5. Replace the cap tightly turning it clockwise until it stops with a click.

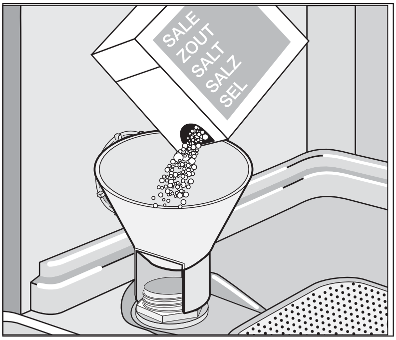

Do not worry if water overflows from the unit when filling with salt, this is quite normal.

The salt indicator light on the control panel can remain illuminated for 2-6 hours after the salt has been replenished, assuming the dishwasher remains switched on. If you are using salts that take longer to dissolve then this can take longer. The function of the machine is not affected.

Use of rinse aid

WARNING!

Only use branded rinse aid for dishwashers.

Never fill the rinse aid dispenser with any other substances (e.g. dishwasher cleaning agent, liquid detergent). This would damage the appliance.

Rinse aid ensures thorough rinsing, and spot and streak free drying.

Rinse aid is automatically added during the last rinse.

1. Open the container by pressing the release button (A).

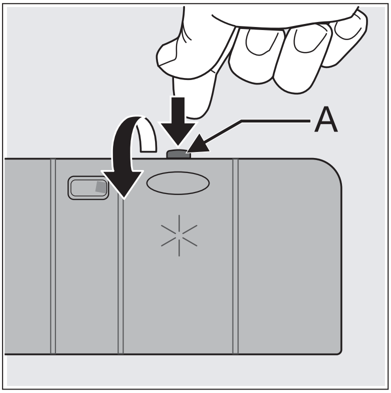

2. Add the rinse aid in the container. The maximum level for filling is indicated by "max".

   The dispenser holds about 110 ml of rinse aid, which is sufficient for between 16 and 40 dishwashing cycles, depending upon the dosage setting.

3. Ensure that the lid is closed after every refill.

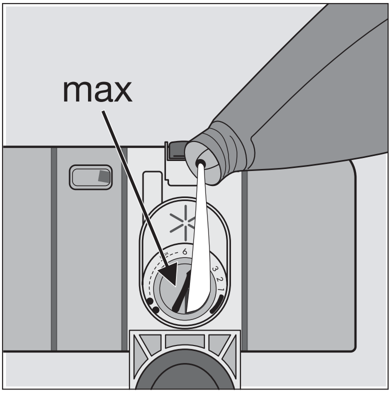

Clean up any rinse aid spilt during filling with an absorbent cloth to avoid excess foaming during the next wash.

Adjusting the dosage of rinse aid

According to the finish and drying results obtained, adjust the dose of rinse aid by means of the 6 position selector (position 1= minimum dosage, position 6= maximum dosage).

The dose is factory set in position 4.

Increase the dose if there are drops of water or lime spots on the dishes after washing.

Reduce it if there are sticky whitish streaks on the dishes or a bluish film on glassware or knife blades.

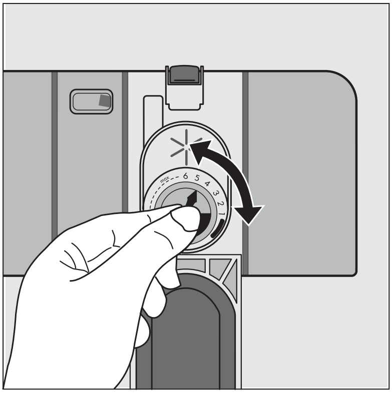

Daily use

- Check if it's necessary to refill with dishwasher salt or rinse aid.
- Load cutlery and dishes into the dishwasher.
- Fill with dishwasher detergent.
- Select a wash programme suitable for the cutlery and dishes.
- Start the wash programme.

Load cutlery and dishes

Sponges, household cloths and any object that can absorb water may not be washed in the dishwasher.

- Before loading the dishes, you should:
  - Remove all left over food and debris.
  - Soften remnants of burnt food in pans

- When loading the dishes and cutlery, please note:
  - Dishes and cutlery must not impede the rotation of the spray arms.
  - Load hollow items such as cups, glasses, pans, etc. with the opening downwards so that water cannot collect in the container or a deep base.
  - Dishes and items of cutlery must not lie inside one another, or cover each other.
  - To avoid damage to glasses, they must not touch.
  - Lay small objects in the cutlery basket.
- Plastic items and pans with non stick coatings have a tendency to retain water drops; these items will not dry as well as porcelain and steel items.
- Light items (plastic bowls etc.) must be loaded in the upper basket and arranged so they do not move.

For washing in the dishwasher the following cutlery and dishes	
are not suitable:	are of limited suitability:
• Cutlery with wooden, horn, china or mother-of-pearls handles. • Plastic items that are not heat resistant. • Older cutlery with glued parts that are not temperature resistant. • Bonded cutlery items or dishes. • Pewter or copper items. • Lead crystal glass. • Steel items prone to rusting. • Wooden platters. • Items made from synthetics fibres.	• Only wash stoneware in the dishwasher if it is specially marked as being dishwasher-safe by the manufacturer. • Glazed patterns may fade if machine washed frequently. • Silver and aluminium parts have a tendency to discolour during washing: Residues, e.g. egg white, egg yolk and mustard often cause discolouring and staining on silver. Therefore always clean left-overs from silver immediately, if it is not to be washed straight after use.

Open the door and slide out the baskets to load the dishes.

The lower basket

Load larger and heavily soiled dishes and pans in the lower basket.

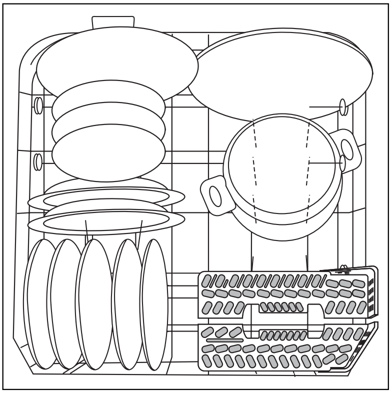

To make it easier to load larger dishes, all rear plate racks in the lower basket can be folded down.

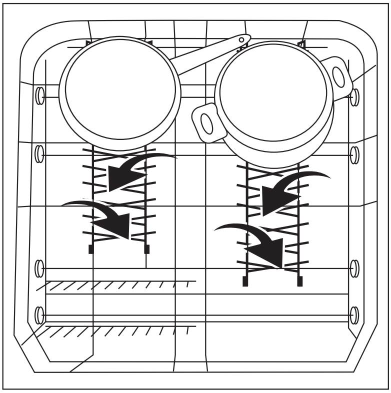

The cutlery basket

WARNING!

Sharp knives and other items of cutlery with sharp edges must be laid in the cutlery tray or in the upper basket because of the risk of injury.

Place knives, small spoons and small forks in the cutlery tray which is in the upper basket. Place forks and spoons that do not fit in the cutlery tray in the cutlery basket.

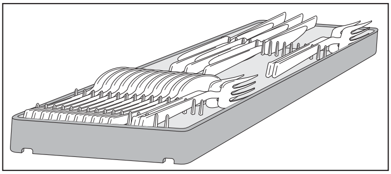

To ensure that all items of cutlery in the cutlery basket can be reached by the water, you should:

1. Place the grid insert on the cutlery basket.

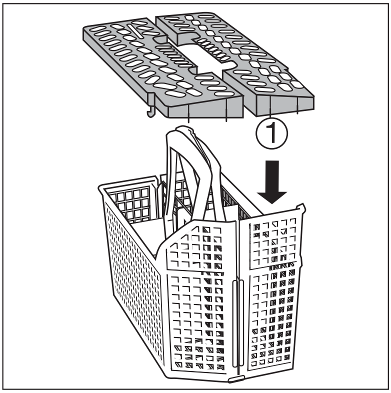

2. Place forks and spoon in the cutlery basket with their handles pointing downwards.

   For larger utensils, such as whisks, leave off one half of the cutlery grid.

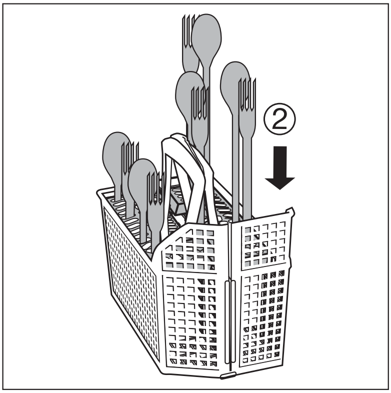

The cutlery basket can be opened out.

Always make sure that you put your hand around both parts of the two-part handle when removing it from the dishwasher.

1. Place the cutlery basket on a table or work surface.
2. Open out the two-part handle.
3. Remove cutlery.

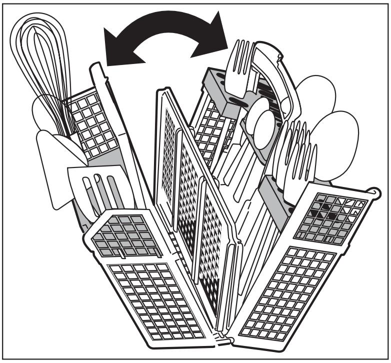

The upper basket

Load smaller, fragile crockery and long, sharp cutlery in the upper basket.

- Arrange items of crockery on and under the folding cup racks so that they are offset from each other and water can reach all items.

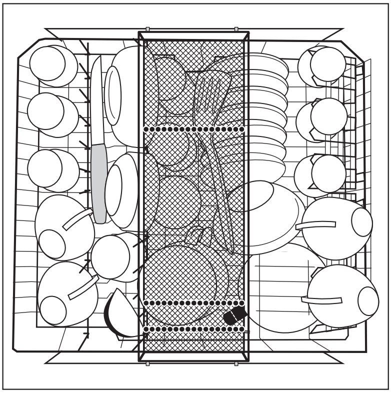

- The cup racks can be folded up out of the way for tall crockery items.
- Lay or hang wine and brandy glasses in the slots in the cup racks.

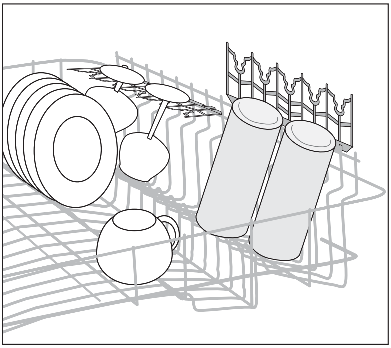

- For glasses with long stems, fold the glass rack to the right, otherwise fold it away to the left.

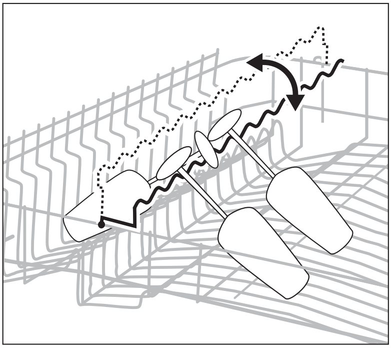

- The row of spikes on the left of the upper basket is also in two parts and can be folded away.

  Spikes not folded away: place glasses, mugs etc. in the upper basket.

  Spikes folded away: more room for serving dishes.

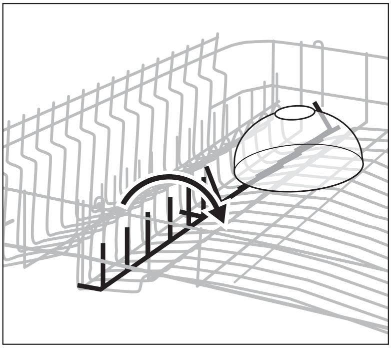

Adjusting the height of the upper basket

Maximum height of the dishes in:		
	the upper basket	the lower basket
With upper basket raised	22 cm	30 cm
With upper basket lowered	24 cm	29 cm

The height of the upper basket can also be adjusted when it is loaded.

Raising / lowering the upper basket:

1. Pull out the upper basket completely.
2. Holding the upper basket by the handle, raise it as far as it will go and then lower it vertically.

   The upper basket will latch into the lower or the upper position.

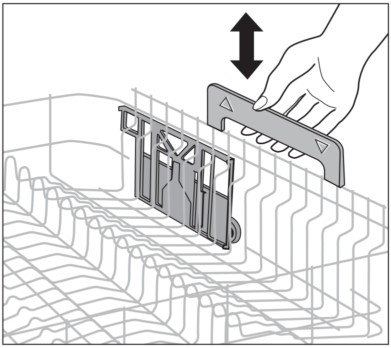

WARNING!

After loading your machine always close the door, as an open door can be a hazard.

Before closing the door, ensure that the spray arms can rotate freely.

Use of detergent

Only use detergents specifically designed for use in dishwashers.

Please observe the manufacturer's dosing and storage recommendations as stated on the detergent packaging.

Using no more than the correct amount of detergent contributes to reducing pollution.

Fill with detergent

1. Open the lid.

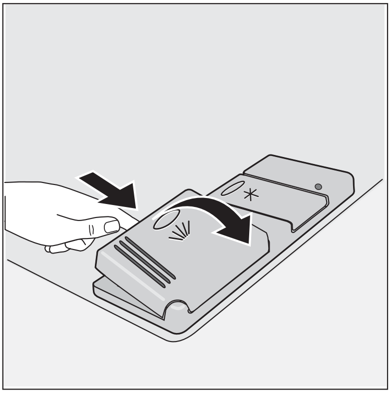

2. Fill the detergent dispenser (1) with detergent. The marking indicates the dosing levels:

   20 = approximately 20 g of detergent

   30 = approximately 30 g of detergent.

3. All programmes with prewash need an additional detergent dose (5/10 g) that must be placed in the prewash detergent chamber (2).

   This detergent will take effect during the prewash phase.

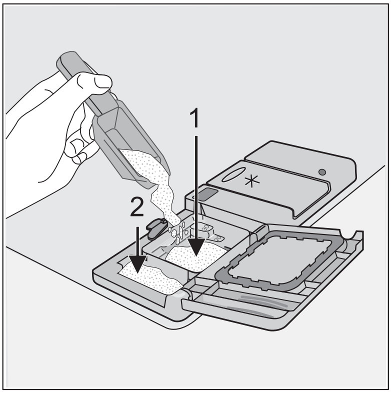

4. When using detergent tablets, place the tablet in compartment (1)
5. Close the lid and press until it locks in place.

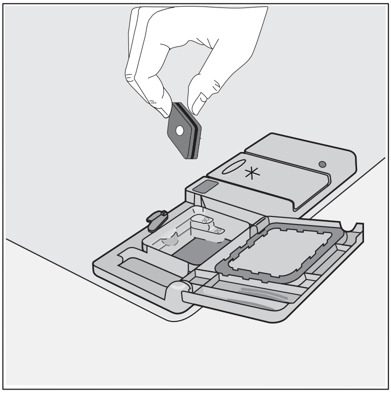

Detergent tablets

Detergent tablets from different manufactures dissolve at different rates. For this reason, some detergent tablets do not attain their full cleaning power during short washing programmes. Therefore, please use long washing programmes when using detergent tablets, to ensure the complete removal of detergent residuals.

Multi-tab function

This appliance is equipped with the "Multitab function", that allows the use of the "Multitab" combi detergent tablets.

These products are detergents with a combined cleaning, rinsing and salt functions. They can also contain other different agents depending on which kind of tablets you choose ("3 in 1", "4 in 1", "5 in 1" etc...).

Check whether these detergents are suitable for your water hardness. See the manufacturers instructions.

This function can be selected with all washing programmes. With the selection of this function the inflow of rinse aid and salt from each respective supply container is automatically deactivated and also the indicator lights for salt and rinse aid are deactivated.

Select the "Multitab function " before the start of a washing programme.

Once this function is selected (indicator light illuminated) it will remain active also for the following washing programmes.

With the use of the "Multitab function", the cycle durations may change. In this case, in the digital display, the indication of the running time of the programme is automatically updated.

Once the programme is running, the "Multitab function " can NO longer be changed. If you want to exclude the "Multitab function " you have to cancel the programme setting and then deactivate the "Multitab function ".

In this case you have to set a washing programme (and desired options) again.

Activation/deactivation of the Multitab function

Press the Multitab button: the corresponding indicator light illuminates. This means that the function is active.

To deactivate the function press the Multitab button again: the indicator light turns off.

If the drying results are not satisfactory we suggest that you:

1. Fill up the rinse aid dispenser with rinse aid.
2. Activate the rinse aid dispenser.
3. Set the rinse aid dosage to position 2.

- The activation/deactivation of the rinse aid dispenser can only be possible with the "Multitab function" active.

Activation/deactivation of the rinse aid dispenser

1. Press the On/Off button. The dishwasher must be in setting mode.
2. Press simultaneously buttons **B** and **C**, until the lights of buttons **A** , **B**, and **C** start flashing.
3. Press button **B**, the lights of buttons **A** and **C** turn off while the light of button **B** goes on flashing. The digital display indicates the current setting:

0d = Rinse aid dispenser deactivated.
1d = Rinse aid dispenser activated.

4. To change the setting, press button **B** again, the digital display indicates the new setting.
5. To memorise the operation, switch off the dishwasher by pressing the On/Off button.

If you decide to turn back to the use of standard detergent system we advise that you:

1. Deactivate the "Multitab function".
2. Fill up the salt container and the rinse aid dispenser again.
3. Adjust the water hardness setting to the highest setting and perform 1 normal washing programme without loading any dishes.
4. Adjust the water hardness setting according to the hardness of the water in your area.
5. Adjust the rinse aid dosage.

Washing programmes

Programme	Degree of soil	Type of load	Programme description					Consumption values [1]		
			Prewash	Main wash	Intermediate rinse	Final rinse	Drying	Duration (minutes)	Energy (kWh)	Water (litres)
AUTOMATIC[2]	Mixed normal and heavy soil	Crockery, cutlery, pots and pans	●	●	1/2x	●	●	90 - 130	1,1 - 1,7	12 - 23
30 MIN[3]	Light soil	Crockery and cutlery		●		●		30	0,9	9
INTENSIV CARE 70°	Heavy soil	Crockery, cutlery, pots and pans	●	●	●	●	●	140 - 150	1,5 -1,7	16 - 18
ECO 50°[4]	Normal soil	Crockery and cutlery	●	●	●	●	●	150 - 160	1,0 - 1,1	12 - 13
45°	Normal soil	Delicate crockery and glassware		●	●	●	●	60 - 70	0,8 -0,9	14 - 15

Programme	Degree of soil	Type of load	Programme description					Consumption values 1)		
			Prewash	Main wash	Intermediate rinse	Final rinse	Drying	Duration (minutes)	Energy (kWh)	Water (litres)
	Any	Partial load (to be completed later in the day) 5)	●					12	0,1	4

1) The consumption values are intended as a guide and depends on the pressure and the temperature of the water and also by the variations of the power supply and the amount of dishes.
2) During the Auto washing programme the amount of soil on the dishes is determined by how cloudy the water is. The programme duration, water and energy consumption levels can vary; this depends upon if the appliance is fully or partially loaded and if the dishes are lightly or heavily soiled. The temperature of the water is automatically adjusted between 45° C and 70° C.
3) Ideal for washing a partially loaded dishwasher. This is the perfect daily programme, made to meet the needs of a family of 4 persons who only wish to load breakfast and dinner crockery and cutlery.
4) Test programme for test institutes.
5) This programme does not require the use of detergent

Select and start a washing programme

Select the washing programme and delay start with the door slightly opened. The start of the programme or the countdown of the delay start will occur only after the closure of the door. Until then it is possible to modify the settings.

1. Check that the baskets have been loaded correctly and that the spray arms are free to rotate.
2. Check that the water tap is opened.
3. Press the On/Off button. The dishwasher must be in setting mode.
4. Press the button corresponding to the required programme (see "Washing programmes" chart). Close the dishwasher door, the programme starts automatically.

Setting and starting the programme with delay start

1. After having selected the washing programme, press the delay start button until the number of hours for the delay start appear in the digital display. The start of the selected washing programme can be delayed for between 1 and 19 hours.
2. Close the dishwasher door, the countdown starts automatically.
3. The countdown will decrease with steps of 1 hour.
4. The opening of the door will interrupt the countdown. Close the door; the countdown will continue from the point at which it was interrupted.
5. Once the delay start has elapsed the programme will start automatically.

Once the washing programme has started, a point-shaped optical signal appears on the floor beneath the dishwasher's door.

This optical signal will remain illuminated for all the duration of the washing programme.

If the appliance has been installed higher up with a furniture door mounted flush, the optical signal will be no longer visible.

WARNING!

Interrupt or cancel a washing programme in progress ONLY if it's absolutely necessary. Attention! Hot steam may escape when the door is opened. Open the door carefully.

Cancelling a delay start or a washing programme in progress

- Simultaneously press and hold the two programme buttons positioned over the word RESET , until all the programme button lights will illuminate.
- Cancelling a delay start involves also the cancelling of the washing programme set. In this case you have to set the washing programme again.
- If a new washing programme is to be selected, check that there is detergent in the detergent dispenser.

Interrupt a washing programme in progress

- Open the dishwasher door; the programme will stop. Close the door; the programme will start from the point at which it was interrupted.

End of the washing programme

- The dishwasher will automatically stop and an audible signal informs you of the end of the washing programme.
- When the washing programme has ended, the optical signal on the floor beneath the dishwasher's door will turn off.

1. Open the dishwasher door.

   The indicator light of the programme just ended remains illuminated.
2. Switch off the dishwasher by pressing the On/Off button.
3. Leave the dishwasher door ajar and wait a few minutes before removing the dishes; in this way they will be cooler and the drying will be improved.

When the washing programme has finished, it is recommended that the dishwasher is unplugged and the water tap turned off.

Unloading the dishwasher

- Hot dishes are sensitive to knocks.

  The dishes should therefore be allowed to cool down before removing from the appliance.
- Empty the lower basket first and then the upper one; this will avoid water dripping from the upper basket onto the dishes in the lower one.
- Water may appear on the sides and the door of the dishwasher as the stainless steel will eventually become cooler than the dishes.

CAUTION!

When the washing programme has finished, it is recommended that the dishwasher is unplugged and the water tap turned off.

Care and cleaning

Cleaning the filters

The filters must be checked and cleaned from time to time. Dirty filters will degrade the washing result.

WARNING!

Before cleaning the filters ensure that the machine is switched off.

1. Open the door, remove the lower basket.
2. The dishwasher filter system comprises a coarse filter (**A**), a microfilter (**B**) and a flat filter. Unlock the filter system using the handle on the microfilter, and remove the filter system.

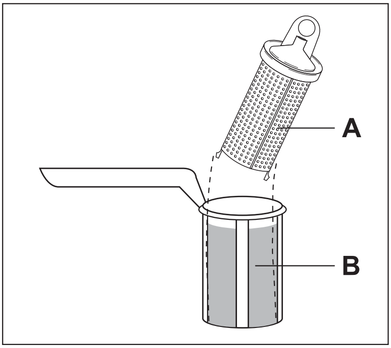

3. Turn the handle about 1/4 a turn anticlockwise and remove the filter system.
4. Take hold of the coarse filter (**A**) by the handle with the hole and remove from the microfilter (**B**).
5. Clean all filters thoroughly under running water.

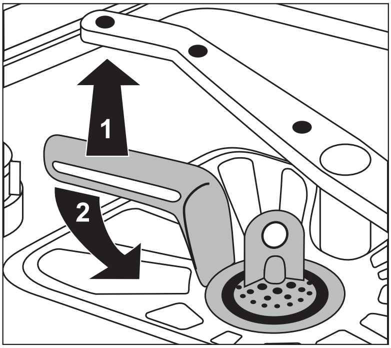

6. Remove the flat filter from the base of the washing compartment and clean both faces thoroughly.
7. Put the flat filter back in the base of the washing compartment and ensure that it fits perfectly.
8. Place the coarse filter (**A**) in the microfilter (**B**) and press together.
9. Put the filter combination in place and lock by turning the handle clockwise to the stop. During this process ensure that the flat filter does not protrude above the base of the washing compartment.

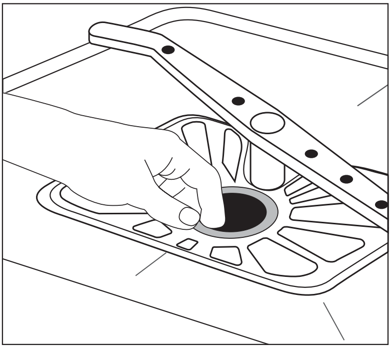

WARNING!

NEVER use the dishwasher without filters. Incorrect repositioning and fitting of the filters will produce poor washing results and may result in damage to the appliance.

Cleaning the spray arms

NEVER try to remove the spray arms.

If residues of soil have clogged the holes in the spray arms, remove them with a cocktail stick.

External cleaning

Clean the external surfaces of the machine and control panel with a damp soft cloth. If necessary use only neutral detergents. Never use abrasive products, scouring pads or solvent (acetone, trichloroethylene etc....).

Internal cleaning

Ensure that the seals around the door, the detergent and rinse aid dispensers are cleaned regularly with a damp cloth.

We recommend every 3 months to run the wash programme for heavy soiled dishes using detergent but without dishes.

Prolonged periods of non-operation

If you are not using the machine for any prolonged period of time you are advised to:

1. Unplug the appliance and then turn off the water.
2. Leave the door ajar to prevent the formation of any unpleasant smells.
3. Leave the inside of the machine clean.

Frost precautions

Avoid placing the machine in a location where the temperature is below 0°C. If this is unavoidable, empty the machine, close the appliance door, disconnect the water inlet pipe and empty it.

Moving the machine

If you have to move the machine (moving house etc....):

1. Unplug it.
2. Turn the water tap off.
3. Remove the water inlet and discharge hoses.
4. Pull the machine out together with the hoses.

Avoid over tilting the machine during transportation.

What to do if...

The dishwasher will not start or stops during operation. Certain problems are due to the lack of simple maintenance or oversights, which can be solved with the help of the indications described in the chart, without calling out an engineer.

Switch off the dishwasher and carry out the following suggested corrective actions.

Fault code and malfunction	Possible cause and solution
• continuous flashing of the light of the running programme • point-shaped optical signal is flashing • **i10 appears in the digital display.** • intermitted audible signal The dishwasher does not fill with water.	• The water tap is blocked or furred with limescale. Clean the water tap. • The water tap is turned off. Turn the water tap on. • The filter (where present) in the threaded hose fitting at the water inlet valve is blocked. Clean the filter in the threaded hose. • The water inlet hose has not been correctly laid or it is bent or squashed. Check the water drain hose connection.
• continuous flashing of the light of the running programme • point-shaped optical signal is flashing • **i20 appears in the digital display.** • intermitted audible signal The dishwasher will not drain.	• The sink spigot is blocked. Clean out the sink spigot. • The water drain hose has not been correctly laid or it is bent or squashed. Check the water drain hose connection.

Fault code and malfunction	Possible cause and solution
• continuous flashing of the light of the running programme • point-shaped optical signal is flashing • **i30 appears in the digital display.** • intermitted audible signal Anti-flood device is activated.	• Close the water tap and contact your local Service Force Centre.
The programme does not start.	• The dishwasher's door has not been properly closed. Close the door. • The main plug is not plugged in. Insert the main plug. • The fuse has blown out in the household fuse box. Replace the fuse. • Delay start has been set. If dishes are to be washed immediately, cancel the delay start.

The flashing of the point-shaped optical signal on the floor beneath the dishwsher's door will not be visible if the appliance has been installed higher up with a furniture door mounted flush.

Once these checks have been carried out, switch on the appliance: the programme will continue from the point at which it was interrupted.

If the malfunction or fault code reappears contact the Service Force Centre.

For other fault codes not described in the above chart, please contact your local Service Force Centre, quoting the model (Mod.), product number (PNC) and serial number (S.N.).

This information can be found on the rating plate located on the side of the dishwasher door.

So that you always have these numbers at hand, we recommend you to make a note of them here:

Mod. : . . . .

PNC :. . . . .

S.N. : . . . .

The wash results are not satisfactory	
The dishes are not clean	• The wrong washing programme has been selected. • The dishes are arranged in such a way as to stop water reaching all parts of the surface. The baskets must not be overloaded. • The spray arms do not rotate freely due to incorrect arrangement of the load. • The filters in the base of the washing compartment are dirty or incorrectly positioned. • Too little or no detergent has been used. • Where there are limescales deposits on the dishes; the salt container is empty or the incorrect level of the water softener has been set. • The drain hose connection is not correct. • The salt container cap is not properly closed.
The dishes are wet and dull	• Rinse aid was not used. • The rinse aid dispenser is empty.
There are streaks, milky spots or a bluish coating on glasses and dishes	• Decrease rinse aid dosing.
Water drops have dries onto glasses and dishes	• Increase rinse aid dosing. • The detergent may be the cause. Contact the detergent manufacturer's consumer care line.

If after all these checks, the problem persists, contact your local Service Force Centre.

Technical data

Dimension	Width - height - depth (cm)	59,6 x 81,8-89,8 x 55,5
Electrical connection - Voltage - Overall power - Fuse	Information on the electrical connection is given on the rating plate on the inner edge of the dishwasher's door	
Water supply pressure	Minimum Maximum	0,05 Mpa (0,5 bar) 0,8 Mpa (8 bar)
Capacity	Place settings	12

Hints for test institutes

Testing in accordance with **EN 60704** must be carried out with appliance fully loaded and using the test programme (see "Washing programmes").

Test in accordance with **EN 50242** must be carried out when the salt container and rinse aid dispenser have been filled with salt and rinse aid respectively and using the test programme (see "Washing programmes").

Full load: 12 standard place settings	
Amount of detergent required:	5 g + 25 g (Type B)
Rinse aid setting:	position 4 (Type III)

Example loading arrangements:

Upper basket [1)]

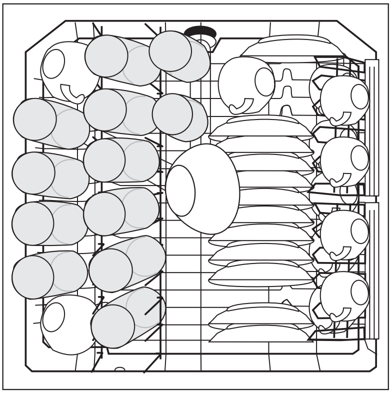

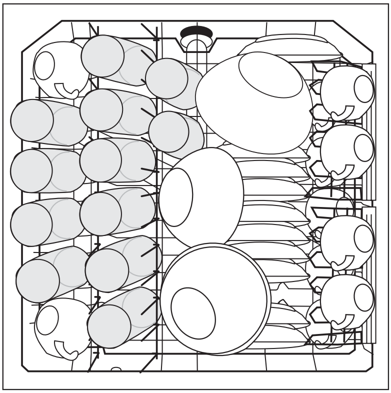

Lower basket with cutlery basket

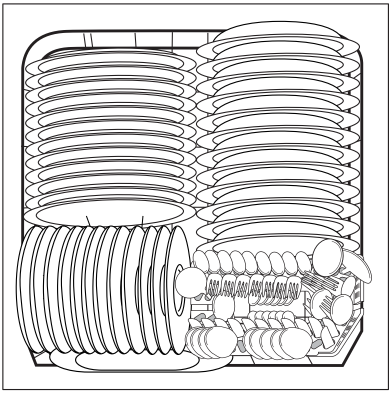

Cutlery basket

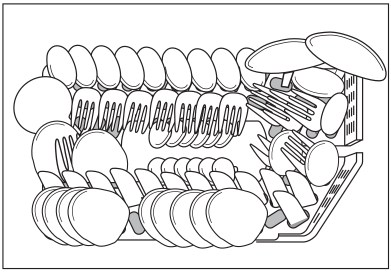

1) If there are cup racks in place on the lefthand side or the cutlery tray is in place, remove them.

Installation instructions

Installation

WARNING!

Any electrical and/or plumbing work required to install this appliance should be carried out by a qualified electrician and/or plumber or competent person.

Remove all packaging before positioning the machine.

If possible, position the machine next to a water tap and a drain.

This dishwasher is designed to be fitted under a kitchen counter or work surface.

Attention! Carefully follow the instructions on the enclosed template for building in the dishwasher and fitting the furniture panel.

No further openings for the venting of the dishwasher are required, but only to let the water fill and drain hose and power supply cable pass through.

The dishwasher incorporates adjustable feet to allow the adjustment of the height.

During all operations that involve accessibility to internal components the dishwasher has to be unplugged.

When inserting the machine, ensure that the water inlet hose, the drain hose and the supply cable are not kinked or squashed.

Fixing to the adjacent units

The dishwasher must be secured against tilting.

Therefore make sure that the counter it is fixed under, is suitably secured to a fixed structure (adjacent kitchen unites, cabinets, wall).

Levelling

Good levelling is essential for correct closure and sealing of the door. When the appliance is correctly levelled, the door will not catch on either side of the cabinet. If the door does not close correctly, loosen or tighten the adjustable feet until the machine is perfectly level.

Water connection

Water supply connections

Connection to a cold water supply is advised. If connection is made to a hot water supply the maximum permissible temperature is 60°C. A hot water supply is not always efficient with very soiled crockery as it shortens the washing programmes a lot.

For making the connection itself, the coupling nut fitted to the machine's supply hose is designed to screw onto a 3/4" gas thread spout or to a purpose made quick-coupling tap such as the Press-block.

The water pressure must be within the limits given in the "Technical specifications". Your local Water Authority will advise you on the average mains pressure in your area.

The water inlet hose must not be kinked, crushed, or entangled when it is being connected.

The dishwasher features fill and drain hoses which can be turned either to the left or the right to suit the installation by means of the locknut.

The locknut must be correctly fitted to avoid water leaks.

(Attention! NOT all models of dishwashers have fill and drain hoses provided with locknut. In this case, this kind of facility is not possible). If the machine is connected to new pipes or pipes which have not been used for a long time, you should run the water for a few minutes before connecting the inlet hose.

DO NOT use connection hoses which have previously been used for an old appliance.

This appliance has been fitted with safety features which will prevent the water used in the appliance from returning back into the drinking water system. This appliance complies with the applicable plumbing regulations.

Water inlet hose with safety valve

After connecting the double-walled water inlet hose, the safety valve is next to the tap. Therefore the water inlet hose is only under pressure while the water is running. If the water inlet hose starts to leak during this operation, the safety valve cuts off the running water.

Please take care when installing the water inlet hose:

- The electrical cable for the safety valve is in the double-walled water inlet hose. Do not immerse the water inlet hose or the safety valve in water.
- If water inlet hose or the safety valve is damaged, remove the mains plug immediately.
- A water inlet hose with safety valve must only be replaced by a specialist or by the Service Force Centre.

WARNING!

Warning! Dangerous voltage.

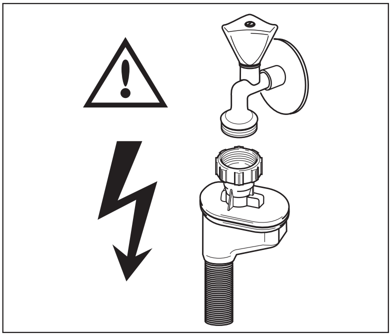

Water outlet hose connection

The end of the drain hose can be connected in the following ways:

1. To the sink outlet spigot, securing it to the underside of the work surface. This will prevent waste water from the sink running into the machine.
2. To a stand pipe provided with vent-hole, minimum internal diameter 4 cm.

The waste connection must be at a maximum height of 60 cm from the bottom of the dishwasher.

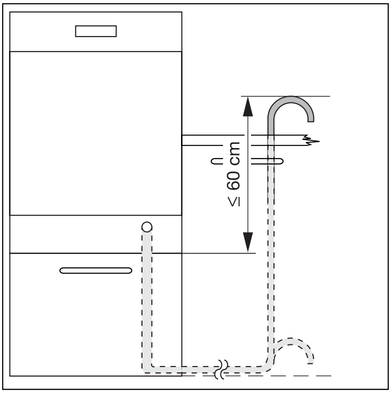

The drain hose can face either to the right or left of the dishwasher.

Ensure the hose is not bent or squashed as this could prevent or slow down the discharge of water.

The sink plug must not be in place when the machine is draining as this could cause the water to syphon back into the machine.

The total length of the drain hose, including any extension you might add, must be no longer than 4 metres. The internal diameter of the extension hose must be no smaller than the diameter of the hose provided.

Likewise the internal diameter of the couplings used for connections to the waste outlet must be no smaller than the diameter of the hose provided.

When connecting the drain hose to an under sink trap spigot, **the entire plastic membrane (A) must be removed**. Failure to remove all the membrane will result in food particles building up over time eventually blocking the dishwasher drain hose spigot.

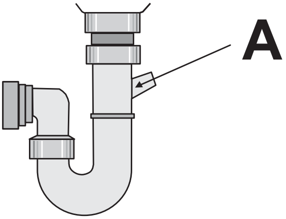

Our appliances are supplied with a security device to protect against the return of dirty water back into the machine. If the spigot of your sink has a "no return valve" incorporated this can prevent the correct draining of your dishwasher. We therefore advise you to remove it.

To avoid water leakage after installation make sure that the water couplings are tight.

Electrical connection

WARNING!

Safety standards require the appliance to be earthed.

Prior to using the appliance for the first time, ensure that the rated voltage and type of supply on the rating plate match that of the supply where the appliance is to be installed.

The fuse rating is also to be found on the rating plate.

Always plug the mains plug into a correctly installed shockproof socket. Multi-way plugs, connectors and extension cables must not be used.

This could constitute a fire hazard through overheating.

If necessary, have the domestic wiring system socket replaced. In case that the electrical cable has to be replaced, contact your local Service Force centre.

The plug must be accessible after the appliance has been installed.

Never unplug the appliance by pulling on the cable. Always pull the plug.

The manufacturer accepts no liability for failure to observe the above safety precautions.

Environment concerns

The symbol on the product or on its packaging indicates that this product may not be treated as household waste. Instead it should be taken to the appropriate collection point for the recycling of electrical and electronic equipment. By ensuring this product is disposed of correctly, you will help prevent potential negative consequences for the environment and human health, which could otherwise be caused by inappropriate waste handling of this product. For more detailed information about recycling of this product, please contact your local council, your household waste disposal service or the shop where you purchased the product.

Packaging material

The packaging materials are environmentally friendly and can be recycled. The plastic components are identified by markings, e.g. >PE<, >PS<, etc. Please dispose of the packaging materials in the appropriate container at the community waste disposal facilities.

WARNING!

When a unit is no longer being used:

- Pull the plug out of the socket.
- Cut off the cable and plug and dispose of them.
- Dispose of the door catch. This prevents children from trapping themselves inside and endangering their lives.

www.electrolux.com

CE

To buy accessories, consumables and spare parts at our online shop please visit:
www.aeg-electrolux.co.uk

117970150 - 022008